VIKING PUMP

TECHNICAL SERVICE MANUAL

UNIVERSAL SEAL HEAVY DUTY PUMPS
SERIES 323A & 4323A STEEL
SERIES 324A/AH/E/EH & 4324A/AH CAST IRON
SERIES 327A & 4327A STAINLESS STEEL
SIZES N, R AND RS

CONTENTS

Special Information 1
Maintenance 3
Disassembly 5
Assembly 6
Mechanical Seal Replacement 7
Seal Removal. 7
Seal Installation. 8
Thrust Bearing Adjustment 10
Installation of Carbon Graphite Bushings 10
Pressure Relief Valve Instructions 11
Disassembly 11
Assembly 11
Pressure Adjustment 11
Heat Cartridges 11

FIGURE 1
N AND R SIZES
(R SIZE SHOWN)

INTRODUCTION

The illustrations used in this manual are for identification purposes only and cannot be used for ordering parts. Obtain a parts list from the factory or a Viking representative. Always give a complete name of part, part number and material with the model number and serial number of pump when ordering repair parts. The unmounted pump or pump unit model number and serial number are on the nameplate.

Model Chart Number

UNMOUNTED PUMP		UNITS
Packed	Mech. Seal	Units are designated by the unmounted pump model numbers followed by a letter indicating drive style. P = Commercial Speed Reducer
N323A	N4323A	
R323A	R4323A	
RS323A	RS4323A	
N324A	N4324A	
N324AH	N4324AH	
N324E		
N324EH		
R324A	R4324A	
R324E	R4324E	
N327A	N4327A	
R327A	R4327A	
RS327A	RS4327A	

This manual deals only with Series 324A, 324AH, 4324A, 4324AH, 324E, 324EH, 323A, 4323A, 327A, 4327A Heavy Duty Bracket Mounted Pumps. **Refer to Figures 1 through 12** for general configuration and nomenclature used in this manual. Pump specifications and recommendations are listed in Catalog Section 630, Viking Universal Seal Pumps.

SPECIAL INFORMATION

DANGER !

Before opening any Viking pump liquid chamber (pumping chamber, reservoir, relief valve adjusting cap fitting, etc.) Be sure:

1. **That any pressure in the chamber has been completely vented through the suction or discharge lines or other appropriate openings or connections.**
2. **That the driving means (motor, turbine, engine, etc.) has been "locked out" or made non-operational so that it cannot be started while work is being done on pump.**
3. **That you know what liquid the pump has been handling and the precautions necessary to safely handle the liquid. Obtain a material safety data sheet (MSDS) for the liquid to be sure these precautions are understood.**

Failure to follow above listed precautionary measures may result in serious injury or death.

SAFETY INFORMATION AND INSTRUCTIONS

IMPROPER INSTALLATION, OPERATION OR MAINTENANCE OF PUMP MAY CAUSE SERIOUS INJURY OR DEATH AND/OR RESULT IN DAMAGE TO PUMP AND/OR OTHER EQUIPMENT. VIKING'S WARRANTY DOES NOT COVER FAILURE DUE TO IMPROPER INSTALLATION, OPERATION OR MAINTENANCE.

THIS INFORMATION MUST BE FULLY READ BEFORE BEGINNING INSTALLATION, OPERATION OR MAINTENANCE OF PUMP AND MUST BE KEPT WITH PUMP. PUMP MUST BE INSTALLED, OPERATED AND MAINTAINED ONLY BY SUITABLY TRAINED AND QUALIFIED PERSONS.

THE FOLLOWING SAFETY INSTRUCTIONS MUST BE FOLLOWED AND ADHERED TO AT ALL TIMES.

Symbol Legend :

⚠ **Danger -** Failure to follow the indicated instruction may result in serious injury or death.

WARNING **Warning -** In addition to possible serious injury or death, failure to follow the indicated instruction may cause damage to pump and/or other equipment.

⚠ **BEFORE** opening any liquid chamber (pumping chamber, reservoir, relief valve adjusting cap fitting, etc.) be sure that :

- Any pressure in the chamber has been completely vented through the suction or discharge lines or other appropriate openings or connections.
- The pump drive system means (motor, turbine, engine, etc.) has been "locked out" or otherwise been made non-operational so that it cannot be started while work is being done on the pump.
- You know what material the pump has been handling, have obtained a material safety data sheet (MSDS) for the material, and understand and follow all precautions appropriate for the safe handling of the material.

⚠ **BEFORE** operating the pump, be sure all drive guards are in place.

⚠ **DO NOT** operate pump if the suction or discharge piping is not connected.

⚠ **DO NOT** place fingers into the pumping chamber or its connection ports or into any part of the drive train if there is **any possibility** of the pump shafts being rotated.

⚠ WARNING **DO NOT** exceed the pumps rated pressure, speed, and temperature, or change the system/duty parameters from those the pump was originally supplied, without confirming its suitability for the new service.

⚠ WARNING **BEFORE** operating the pump, be sure that:

- It is clean and free from debris
- all valves in the suction and discharge pipelines are fully opened.
- All piping connected to the pump is fully supported and correctly aligned with the pump.
- Pump rotation is correct for the desired direction of flow.

WARNING **INSTALL** pressure gauges/sensors next to the pump suction and discharge connections to monitor pressures.

⚠ WARNING **USE** extreme caution when lifting the pump. Suitable lifting devices should be used when appropriate. Lifting eyes installed on the pump must be used **only** to lift the pump, **not** the pump with drive and/or base plate. If the pump is mounted on a base plate, the base plate must be used for all lifting purposes. If slings are used for lifting, they must be safely and securely attached. For weight of the pump alone (which does not include the drive and/or base plate) refer to the Viking Pump product catalog.

⚠ **DO NOT** attempt to dismantle a pressure relief valve that has not had the spring pressure relieved or is mounted on a pump that is operating.

⚠ **AVOID** contact with hot areas of the pump and/or drive. Certain operating conditions, temperature control devices (jackets, heat-tracing, etc.), improper installation, improper operation, and improper maintenance can all cause high temperatures on the pump and/or drive.

⚠ WARNING **THE PUMP** must be provided with pressure protection. This may be provided through a relief valve mounted directly on the pump, an in-line pressure relief valve, a torque limiting device, or a rupture disk. If pump rotation may be reversed during operation, pressure protection must be provided on ***both*** sides of pump. Relief valve adjusting screw caps must always point towards suction side of the pump. If pump rotation is reversed, position of the relief valve must be changed. Pressure relief valves cannot be used to control pump flow or regulate discharge pressure. For additional information, refer to Viking Pump's Technical Service Manual TSM 000 and Engineering Service Bulletin ESB-31.

⚠ WARNING **THE PUMP** must be installed in a matter that allows safe access for routine maintenance and for inspection during operation to check for leakage and monitor pump operation.

ROTATION: Viking pumps operate equally well in a clockwise or counterclockwise rotation. Shaft rotation determines which port is suction and which is discharge. Port in area where pumping elements (gear teeth) come out of mesh is suction port.

CIRCULATION LINES: These are standard equipment and must be hooked up properly. Packed pumps have a flush line from packing chamber to *discharge* port. Mechanical seal pumps have a suckback line from seal chamber to *suction* port. If pump rotation is reversed, be sure circulation connections are hooked up to the suction or discharge port as noted above to avoid excessive leakage or damage to pump. If pump is handling heated product, be sure circulation line is insulated to assure continued flow.

Jacketed head (R standard, optional on N size) and jacketed bracket provide large chambers on both sides of the pumping chamber for improved temperature control of product in pump. These features do not alter basic steps in disassembly and assembly of your pump.

PRESSURE RELIEF VALVES:

1. Viking pumps are positive displacement pumps and must be provided with some sort of pressure protection. This may be a relief valve mounted directly on the pump, an inline pressure relief valve, a torque limiting device or a rupture disk.
2. There are relief valve options available on those pump models designed to accept a relief valve. Options include a jacketed relief valve for the N pump (only available with the non-jacketed head). A non-jacketed relief valve is available for the R pump. The RS pump does not have a relief valve available.
3. If pump rotation is to be reversed during operation, pressure protection must be provided on ***both*** sides of pump.
4. Relief valve adjusting screw cap must ***always*** point towards suction side of pump. If pump rotation is reversed, remove pressure relief valve and turn end for end. **Refer to Figure 2.**
5. Pressure relief valves cannot be used to control pump flow or regulate discharge pressure.

For additional information on pressure relief valves, **Refer to Technical Service Manual TSM000 and Engineering Service Bulletin ESB-31.**

SPECIAL MECHANICAL SEALS:

Extra care should be taken in repair of pumps with mechanical seals. Be sure to read and follow all special instructions supplied with your pump.

MAINTENANCE

Series 323A, 4323A, 324A, 324AH, 4324A, 4324AH, 324E, 324EH, 327A, and 4327A pumps are designed for long, trouble-free service life under a wide variety of application conditions with a minimum of maintenance. The points listed below will help provide long service life.

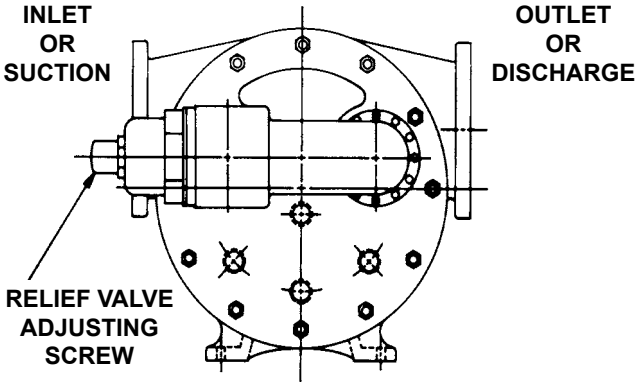

FIGURE 2

LUBRICATION: External lubrication must be applied slowly with a hand gun to all lubrication fittings every 500 hours of operation with multi-purpose grease, NLGI # 2. Do not over-grease. Applications involving very high or low temperatures will require other types of lubrication. **Refer to Engineering Service Bulletin ESB-515.** Consult factory with specific lubrication questions.

PACKING ADJUSTMENT: New packed pumps require initial packing adjustment to control leakage as packing "runs in". Make initial adjustments carefully and do not over-tighten packing gland. After initial adjustment, inspection will reveal need for packing replacement. **Refer to instructions under Assembly on page 6,** regarding repacking pump.

CLEANING PUMP: Keep pump as clean as possible. This will facilitate inspection, adjustment and repair work and help prevent overlooking a dirt covered grease fitting.

***STORAGE*:** If pump is to be stored, or not used for six months or more, pump must be drained and a light coat of light oil must be applied to all internal pump parts. Lubricate fittings and apply grease to pump shaft extension. Viking suggests rotating pump shaft by hand one complete revolution every 30 days to circulate the oil.

SUGGESTED REPAIR TOOLS: The following tools must be available to properly repair Universal Seal Bracket Pumps. These tools are in addition to standard mechanics' tools such as open-end wrenches, pliers, screwdrivers, etc. Most of the items can be obtained from an industrial supply house.

1. Soft headed hammer
2. Allen wrenches (some mechanical seals and set collars)
3. Packing hooks, flexible (packed pumps)
4. Mechanical seal installation sleeve
   2-751-006-630 for 3.4375 inch seal; "N" pumps.
   2-751-010-630 for 4.5000 inch seal; "R" and "RS" Pumps.
5. Bearing locknut spanner wrench
6. Spanner wrench, (Supplied with pump)
   Viking Part Number 3-810-009-631
7. Brass bar
8. Arbor press

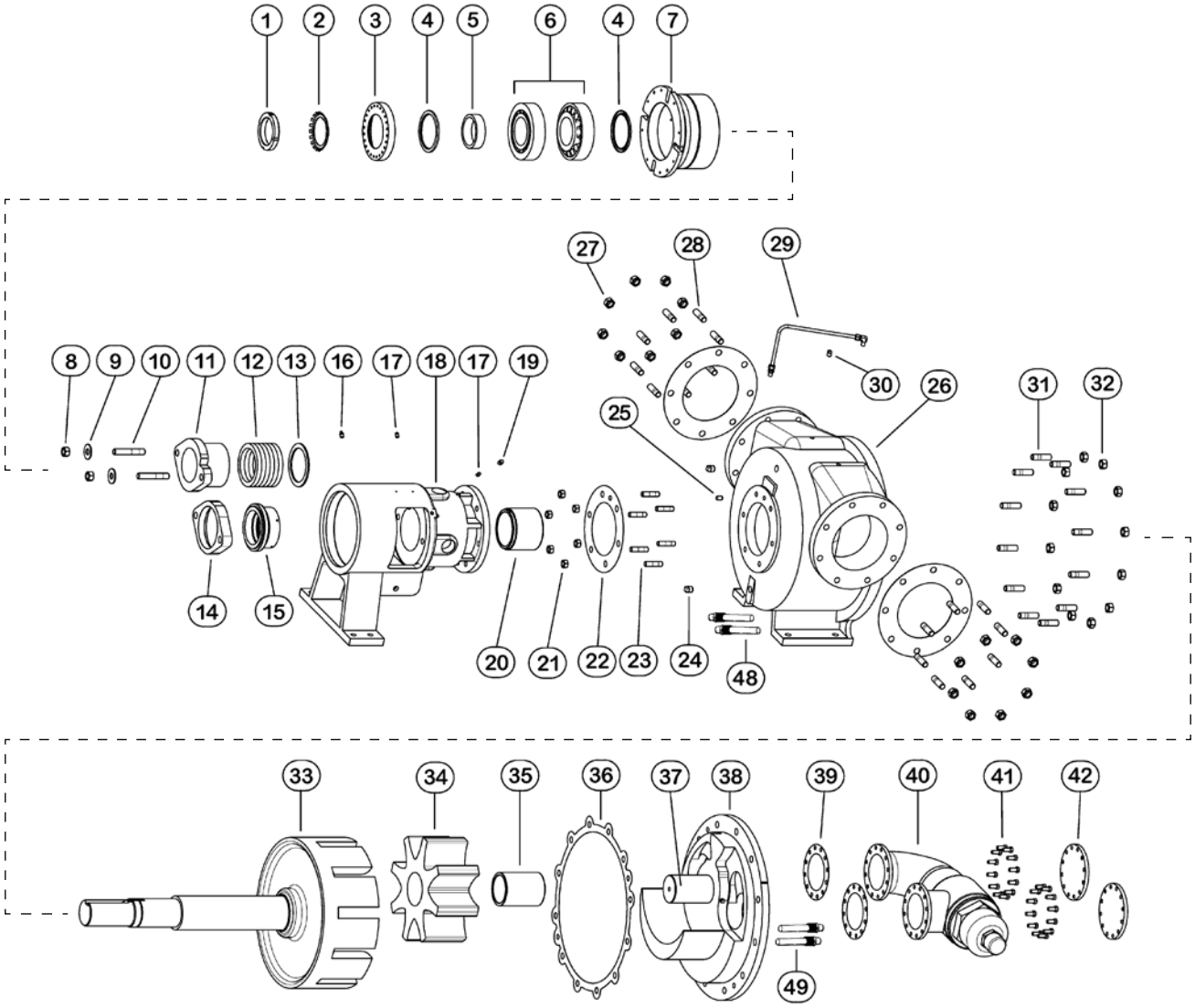

ITEM	NAME OF PART	ITEM	NAME OF PART	ITEM	NAME OF PART
1	Locknut	16	Grease Fitting	31	Stud for Head
2	Lockwasher	17	Pipe Plug	32	Nut for Head
3	End Cap for Bearing Housing	18	Bracket and Bushing Assembly	33	Rotor and Shaft Assembly
4	Lip Seal for Bearing Housing (2 Req'd)	19	Pipe Plug	34	Idler and Bushing Assembly
5	Bearing Spacer Collar	20	Bracket Bushing	35	Idler Bushing
6	Roller Bearing (2 Req'd)	21	Nut for Bracket	36	Head Gasket
7	Bearing Housing	22	Bracket Gasket	37	Idler Pin
8	Packing Gland Nut	23	Stud for Bracket	38	Head and Idler Pin Assembly
9	Packing Gland Washer	24	Pipe Plug	39	Relief Valve Gasket
10	Packing Gland Stud	25	Locating Pin	40	Internal Relief Valve
11	Packing Gland	26	Casing	41	Capscrew for Relief Valve
12	Packing	27	Nut for Flanges	42	Cover Plate
13	Packing Retaining Washer	28	Stud for Flanges	48	Heater Cartridges for Bracket (324E/EH Pumps Only)
14	Seal Plate	29	Flush / Suckback Line	49	Heater Cartridges for Head (324E/EH Pumps Only)
15	Mechanical Seal	30	Pipe Plug		

FIGURE 3
EXPLODED VIEW OF UNIVERSAL BRACKET PUMP (N SHOWN)

DISASSEMBLY

DANGER !

Before opening any Viking pump liquid chamber (pumping chamber, reservoir, relief valve adjusting cap fitting, etc.) Be sure:

1. **That any pressure in the chamber has been completely vented through the suction or discharge lines or other appropriate openings or connections.**
2. **That the driving means (motor, turbine, engine, etc.) has been "locked out" or made non-operational so that it cannot be started while work is being done on pump.**
3. **That you know what liquid the pump has been handling and the precautions necessary to safely handle the liquid. Obtain a material safety data sheet (MSDS) for the liquid to be sure these precautions are understood.**

Failure to follow above listed precautionary measures may result in serious injury or death.

1. Mark head and casing before disassembly to insure proper reassembly. The idler pin, which is offset in pump head, must be positioned toward and equal distance between port connections to allow for proper flow of liquid through the pump.

Remove nuts from head. Jackscrews should be used to back head away from casing. Proper size and length of jackscrews for pump size are shown in **Figure 4.** The use of a hoist to support head will facilitate its removal.

Avoid damaging head gasket. Back head slightly away from casing. Do not allow idler to fall from idler pin. To prevent this, tilt top of head back when removing. Remove head from pump. A lifting hook will provide adequate connection for hoisting head. If a hoist is not available, cribbing or blocking can be used to support head. This will eliminate having to lift head into position when reassembling pump.

If pump is furnished with pressure relief valve, it need not be removed from head or disassembled at this point; however, removing relief valve will lessen total weight of part. Do not use chain or cable around relief valve body to support head during removal. **Refer to Pressure Relief Valve Instructions, page 11.**

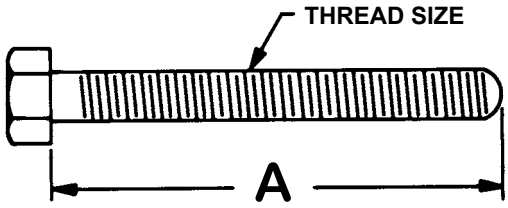

MINIMUM LENGTH OF JACK SCREWS

PUMP SIZE	NO. SCREWS USED	A	THREAD SIZE (INCH)
N	2	4.00	0.50" - 13 NC
R & RS	2	4.50	0.63" - 11 NC

FIGURE 4

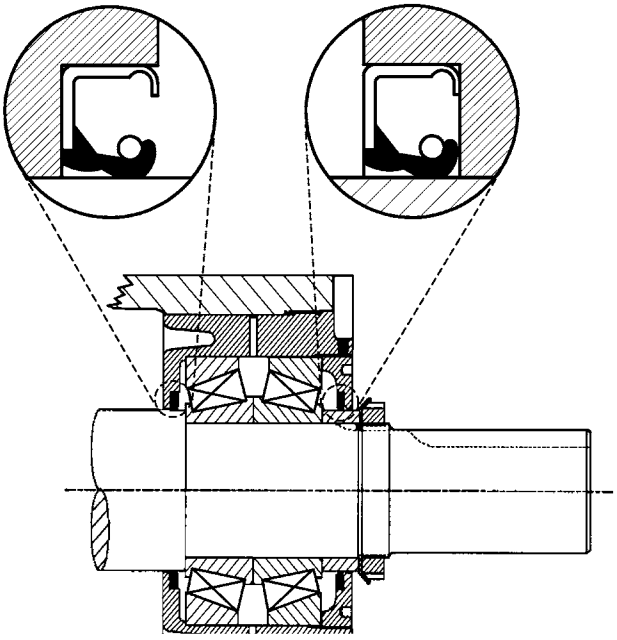

FIGURE 5
N-R BEARING HOUSING ASSEMBLY

2. Remove head gasket, idler and bushing assembly.

3. Insert a length of hardwood or brass through port opening between rotor teeth or lock coupling end or shaft to keep shaft from turning. Bend up tang of lockwasher and with a spanner wrench; remove locknut and lockwasher from shaft. Remove length of hardwood or brass from port opening.

4. Loosen the two setscrews in the face of the bearing housing and remove the bearing housing assembly from the bracket. **Refer to Figure 5, page 5.**

5. Remove pipe plug from drain hole in casing, breaking vacuum behind rotor.

6. Remove packing gland capscrews. Slide packing gland out of stuffing box, and remove packing and packing retainer washer.

NOTE: Reference **Mechanical Seal Replacement** beginning on **page 7** when disassembling a seal pump.

7. Cushion end of shaft with a hardwood block and drive rotor out of casing, being careful to avoid damaging bracket bushing. Support weight of rotor with a hoist. A cable sling can be used around shaft, or around rotor teeth, to carry weight of part.

8. Loosen two radial setscrews in flange of bearing housing and with a spanner wrench remove the outer end cap with closure and outer bearing spacer collar.

9. Remove the two tapered roller bearings from the bearing housing.

10. Clean all parts thoroughly and examine for wear and damage. Check lip seals, bearings, bushings, and idler pin and replace if necessary. Check all other parts for nicks, burrs, excessive wear and replace if necessary. Wash bearings in clean solvent. Blow out bearings with compressed air. Do not allow bearings to spin; turn them slowly by hand. Spinning bearings will damage bearing components. Make sure bearings are clean, then lubricate with light oil and check for roughness. Roughness can be determined by turning outer race by hand.

    CAUTION: Do not intermix inner and outer races of tapered roller bearing.

    NOTE: The R4327A pump has a special idler arrangement, **refer to Installation of Carbon Graphite Bushings, page 10.**

11. Casing can be checked for wear or damage while mounted on bracket.

12. Inspect bracket bushing for wear and replace if damaged or worn.

ASSEMBLY

1. Install bracket bushing. If bracket bushing has a lubrication groove, install bushing with groove at 12:00 o'clock position in bracket. If carbon graphite, **Refer to Installation of Carbon Graphite Bushings, page 10.**

2. Install bracket and bushing assembly on the casing. The locating pin is essential for proper alignment.

3. Coat shaft of rotor shaft assembly with light oil. Start end of shaft in bracket bushing turning from right to left, slowly pushing rotor in casing.

4. Coat idler pin with light oil and place idler and bushing on idler pin in head. If replacing with carbon graphite bushing, **Refer to Installation of Carbon Graphite Bushings, page 10.**

5. Using a .010 to .015 inch thick head gasket, install head and idler assembly on pump. Pump head and casing should have been marked before disassembly to insure proper reassembly. If not, be sure idler pin, which is offset in pump head, is positioned toward and equal distance between port connections to allow for proper flow of liquid through pump.

    Refer to Figure 5, page 5 for bearing housing assembly.

6. Install the lipseal in the bearing housing. **See Figure 5, page 5** for lip orientation.

7. Pack tapered roller bearings with grease and press or push bearings into housing with large end of inner races together. It is possible to install bearings incorrectly. For proper assembly see **Figure 5, page 5.**

8. Install the lipseal in the end cap. **See Figure 5, page 5** for lip orientation. Thread the end cap into the bearing housing along with outer bearing spacer collar and tighten against the bearing.

    Tapered roller bearings require preload to operate properly. To set preload tighten end cap so that inner races of bearings cannot be rotated by hand. Make a mark on the outside diameter of the bearing housing and a corresponding mark on the bearing housing end cap**.** Rotate the bearing housing end cap in a counter clockwise direction until the mark on the outside diameter of the bearing housing is past the mark on the bearing housing end cap by 0.375 in. (9.52mm) for the N bearing housing or 0.422 in. (10.72mm) for the R & RS bearing housings. This will provide the correct end play for the bearings.

    Lock end cap in place with two setscrews in the flange of the bearing housing.

9. When assembling a packed pump, use packing suitable for liquid being pumped. Install packing, staggering the joints from one side of shaft to other. Lubricate packing rings with oil, grease, or graphite to aid assembly. Install packing, studs, and nuts. Make sure gland is installed square and nuts are tightened evenly. Tighten nuts until packing gland is snug against packing. **Do not over-tighten!**

    NOTE: See Seal Installation on page 8 when reassembling a mechanical seal pump.

10. Thread the bearing housing with lipseals, end cap, outer bearing spacer collar and bearings installed into bracket.
11. Put lockwasher and locknut on shaft. Insert length of hardwood or brass through port opening between rotor teeth to keep shaft from turning. Tighten locknut to 170-190 ft.-lbs. torque. If tang does not line up with slot, tighten locknut until it does. Failure to tighten locknut or engage lockwasher tang could result in early bearing failure and cause damage to rest of pump. Bend one tang of the lockwasher into a slot on the locknut. Remove the length of hardwood or brass from the port opening.
12. Adjust pump end clearance as in **Thrust Bearing Adjustment page 10.**
13. Reinstall drain plug in casing. Lubricate all grease fittings with multi-purpose grease, NLGI #2.

DANGER !

Before starting pump, be sure all drive equipment guards are in place.

Failure to properly mount guards may result in serious injury or death.

MECHANICAL SEAL REPLACEMENT

This manual deals with the three standard types of mechanical seals supplied on Universal Bracket models 4323A, 4324A, 4324AH, and 4327A.

1. Cartridge **(Figure 6, page 8)**
2. Elastomeric O-ring **(Figure 8, page 9)**
3. PTFE Wedge **(Figure 9, page 9)**

Identification of seal type is an important step towards proper maintenance. For mechanical seal types not shown, see the Seal Installation Drawing (SID) furnished with the pump or contact a Viking representative.

SEAL REMOVAL

DANGER !

Before opening any Viking pump liquid chamber (pumping chamber, reservoir, relief valve adjusting cap fitting, etc.) Be sure:

1. **That any pressure in the chamber has been completely vented through the suction or discharge lines or other appropriate openings or connections.**
2. **That the driving means (motor, turbine, engine, etc.) has been "locked out" or made non-operational so that it cannot be started while work is being done on pump.**
3. **That you know what liquid the pump has been handling and the precautions necessary to safely handle the liquid. Obtain a material safety data sheet (MSDS) for the liquid to be sure these precautions are understood.**

Failure to follow above listed precautionary measures may result in serious injury or death.

SEAL REMOVAL CARTRIDGE TYPE

Cartridge mechanical seals are designed so that they may be replaced with minimal pump and piping disassembly. The seal may be accessed by removing the bearing housing. **(See Disassembly,** Steps 3-4, **page 6).**

1. Remove any circulation tubing connected to the seal gland.
2. **(see Figure 6 below)** Loosen setscrews on the seal collar to free the cartridge seal from the shaft.
3. Remove the two gland nuts and slide the cartridge seal out through the bearing housing opening.

If the pump is to be disassembled further, **refer to Disassembly, page 5.**

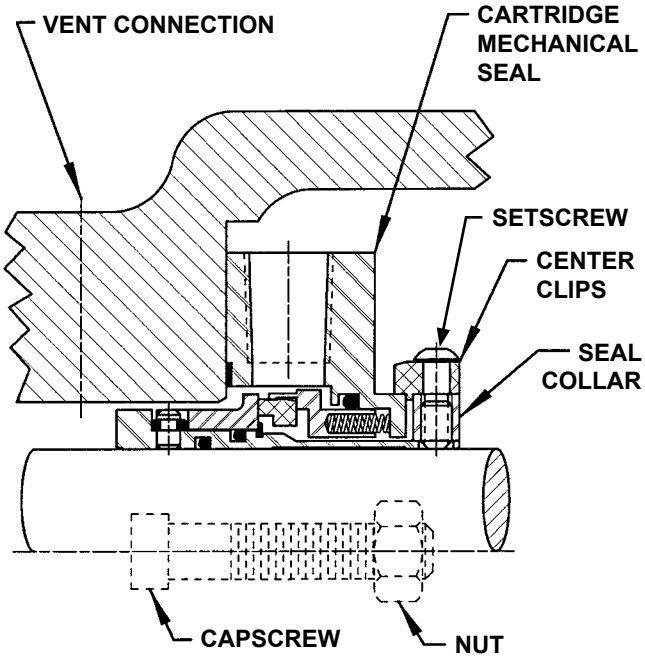

FIGURE 6
Cartridge Mechanical Seal

ELASTOMERIC O-RING AND PTFE WEDGE TYPE

Elastomeric o-ring and PTFE wedge seals generally require pump disassembly to be replaced **(See Disassembly,** Steps 1-5, **pages 5-6).**

1. Loosen nuts and remove seal holder, seal seat and seal gasket(s).
2. Loosen setscrew in mechanical seal rotary member. **NOTE:** Piping and/or plugs will need to be removed to access setscrews.

   If changing the mechanical seal is the extent of the maintenance to be performed, then the rotor shaft assembly only needs to be moved far enough to dislodge the rotary member of the seal. To accomplish this, drive the rotor/shaft assembly out until the rotor teeth extend past the face of the casing (4.5" for the N, or 3.5" for the R and RS). Now push the rotor/shaft assembly back into the casing. The rotary member of the seal should now be pushed far enough down the shaft for easy removal. If the rotor/shaft assembly is to be completely removed, then the remainder of the mechanical seal may be removed in conjunction with Step 7 of **Disassembly, page 6.**

SEAL INSTALLATION

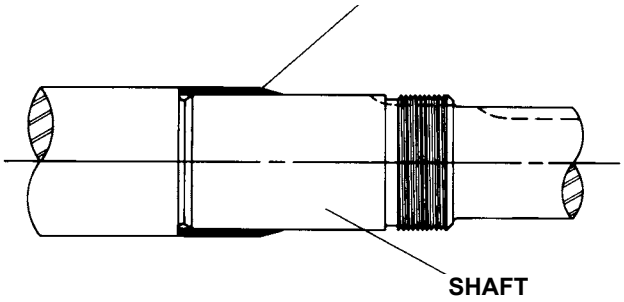

COAT ROTOR SHAFT, TAPERED INSTALLATION SLEEVE AND INNER DIAMETER OF MECHANICAL SEAL WITH LIGHT OIL BEFORE ASSEMBLY.

FIGURE 7

CARTRIDGE TYPE

1. **NOTE:** Burrs left on shaft can damage O-ring on seal sleeve during installation. Inspect shaft for burrs and remove any found with a fine grade of emery cloth.
2. Clean rotor shaft and face of seal chamber.
3. Place tapered installation sleeve on shaft. Coat rotor shaft, tapered installation sleeve, and O-ring in the inside diameter of cartridge seal sleeve with a generous amount of light oil. **Refer to Figure 7.**
4. Slide cartridge seal over installation sleeve on shaft until it contacts the seal chamber face. Remove tapered installation sleeve from shaft.
5. Follow steps 10-12 on **page 6** under **Assembly.**
6. Install gland nuts studs and secure gland to bracket face. **NOTE**: Turn shaft several turns while gland is loose to center seal; then tighten gland tight enough to compress gasket. Tighten only enough to contain leakage and not to distort gland.
7. Lock cartridge seal drive collar to shaft and remove or turn centering clips out of the way so as to clear the drive collar.
8. Turn shaft by hand to check drive collar for runout.
9. Connect circulation line, or vent stuffing box seals without circulation line until liquid is present on start up.

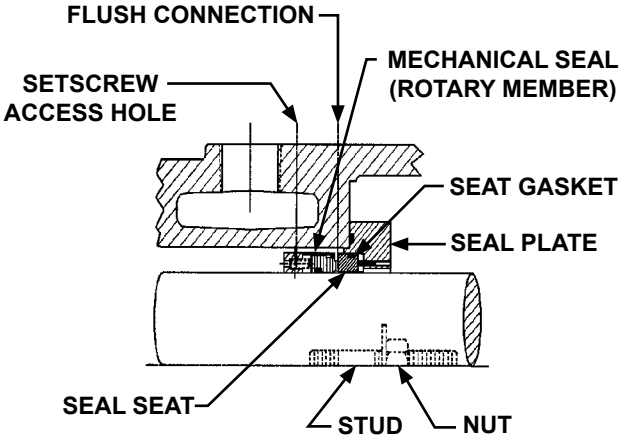

FIGURE 8
ELASTOMERIC O-RING SEAL

DANGER !

Before starting pump, be sure all drive equipment guards are in place.

Failure to properly mount guards may result in serious injury or death.

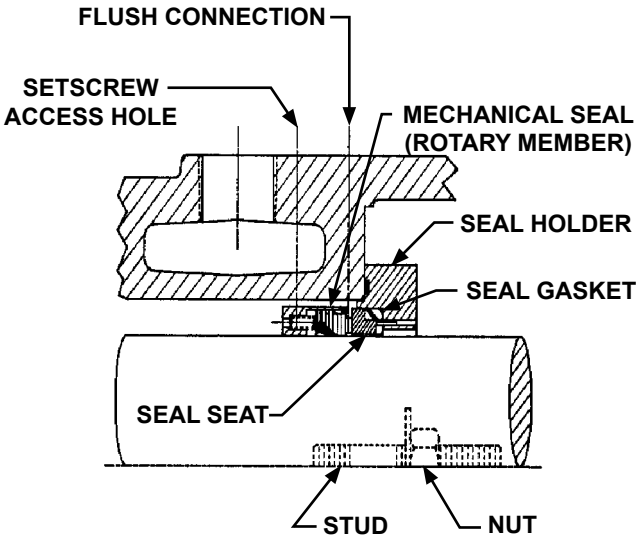

FIGURE 9
PTFE WEDGE SEAL

ELASTOMERIC O-RING AND PTFE WEDGE TYPE

For complete pump assembly instructions **see Assembly, page 6.**

1. Clean shaft and seal housing bore. Make sure they are free of dirt, grit and scratches. Gently file a radius on leading edge of shaft step over which seal is to be placed.

   NOTE: Never touch mechanical seal faces with anything except clean hands or clean cloth. Minute particles can scratch the seal faces and cause leakage.

2. Place tapered installation sleeve on the shaft **(See Figure 7, page 8).**
3. Coat outside of tapered installation sleeve and inside of rotary member of the seal with a generous quantity of light oil. Grease is not recommended.
4. Start rotary member on shaft and ease over tapered sleeve **(See Figure 10).**

   NOTE: Some PTFE wedge seals are equipped with holding clips, which compress the seal springs. Remove holding clips to release springs after seal is installed on shaft.

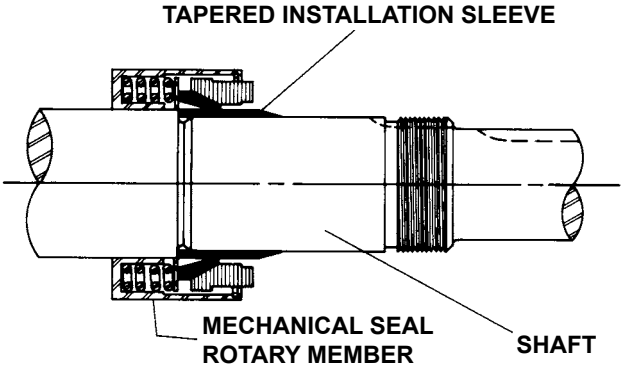

FIGURE 10

5. Move rotary member so set screws are directly below seal set screw access holes on side of bracket **(See Figures 8 and 9).** Tighten all set screws securely to shaft.

   NOTE: Be sure that the rotor and shaft are positioned against the head before tightening set screws.

6. ***FOR "O-RING" GASKET TYPE MECHANICAL SEAL SEAT (O-RING SEAL):*** Lubricate outer diameter of O-ring seal gasket with oil. Flush sealing faces of both rotary member and seal seat with oil and press seal seat in to bore until back, unlapped face, is flush with bore. Install seal holder and nuts and tighten securely.

   FOR "CLAMPED-IN" TYPE MECHANICAL SEAL SEAT (WEDGE SEAT): Flush sealing faces of both rotary member and seal seat with oil and install seal seat and seat gasket over end of shaft against machined bracket face. Install other seal gasket, seal holder, seal plate, capscrews and nuts and fasten securely.

7. Remove tapered installation sleeve.

8. Install thrust bearing assembly and adjust end clearance. **Refer to Thrust Bearing Adjustment.**
9. Draw seal plate up to seal box face by evenly tightening gland nuts until seal plate is securely fastened.
10. Connect circulation line or vent stuffing box for seals without circulation line until liquid is present on start up.

    NOTE: For maximum seal life, circulation line should be used.
11. **Refer to Assembly on page 6** to complete assembly.

THRUST BEARING ADJUSTMENT

1. **Make sure the pump is not running and all power to drive the pump is "locked out".**
2. Loosen the two set screws in the outer face of the bearing housing and rotate the bearing housing in a clockwise direction until it cannot be turned any more. This ensures the rotor is all the way forward and is touching the head. It will not be possible to turn the rotor by hand in this location.

PUMP SIZE	MODEL	STANDARD END CLEARANCE (Inch)	TURN BRG. HOUSING C.C.W. LENGTH ON O.D. (Inch)	ADDITIONAL LENGTH ON BRG. HOUSING O.D. FOR EACH .001" OF END CLEAR. (Inch)
N	324A 4324A 324AH 4324AH 324E 324EH 323A 4323A 327A 4327A	.015	6.09	.41
R RS	324A 4324A 323A 4323A 327A 4327A	.020	9.09	.45

3. Make a mark on the outside diameter of the bearing housing and a corresponding mark on the bearing bracket**.**
4. Rotate the bearing housing in a counter clockwise direction until the mark on the outside diameter of the bearing housing is past the mark on the bearing bracket by 6.09 in. (155 mm) or 9.09 in. (231 mm) See chart above. This will provide the standard end clearance for the pump. Operating the pump at higher temperatures or viscosities may require additional end clearance. Contact your local Viking representative for those clearances. Note that 0.41 in. (10.4 mm) or 0.45 in. (11.5mm) rotation on the outside diameter of the bearing housing equals 0.001 in. (0.03mm) additional end clearance.
5. Tighten the setscrews.
6. Rotate the rotor shaft by hand to make sure it turns freely.

INSTALLATION OF CARBON GRAPHITE BUSHINGS

When installing carbon graphite bushings, extreme care must be taken to prevent breaking. Carbon graphite is a brittle material and easily cracked. If cracked, the bushing will quickly disintegrate. Using a lubricant and adding a chamfer on the bushing and the bushing bore will help in installation. The additional precautions listed below must be followed for proper installation.

1. A press must be used for installation.
2. Be certain bushing is started straight.
3. Do not stop pressing operation until bushing is in proper position. Starting and stopping will result in a cracked bushing.
4. Check bushing for cracks after installation.

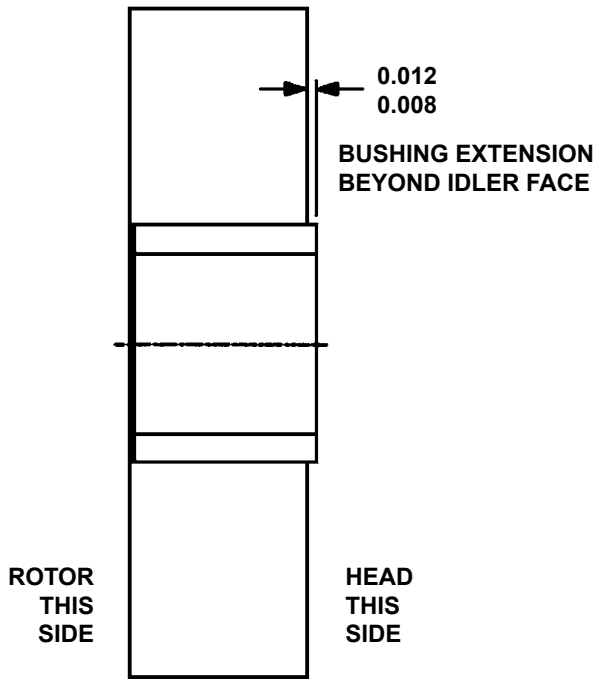

FIGURE 11
IDLER AND BUSHING ASSEMBLY

NOTE:

The R327A and R4327A (stainless steel) pumps have a special idler-bushing arrangement. **See Figure 11.**

The Carbon Graphite idler bushing extends beyond the idler face on one side of the idler. This side of the idler is placed toward the head, which allows the Carbon Graphite bushing to contact the head and provide clearance between the stainless steel idler face and the head. The Carbon Graphite bushing extension is 0.008 – 0.012" **(See Figure 11).**

The idler bushing has a high interference fit and must be installed by heat shrinking. The idler must be heated to 600º F for 1.5 hours before installing the idler bushing. The idler bushing is to extend beyond the idler face 0.008 – 0.012".

Install the idler & bushing over the idler pin placing the side of the idler with the bushing extension against the head. Adjust end clearance as stated in **Thrust Bearing Adjustment.**

NOTE:

The "RS" size pumps use a two idler and bushing arrangement.

The RS327A and RS4327A idlers are a non-galling stainless steel alloy (770) material as standard, the bushings are installed flush with the idler face.

PRESSURE RELIEF VALVE INSTRUCTIONS

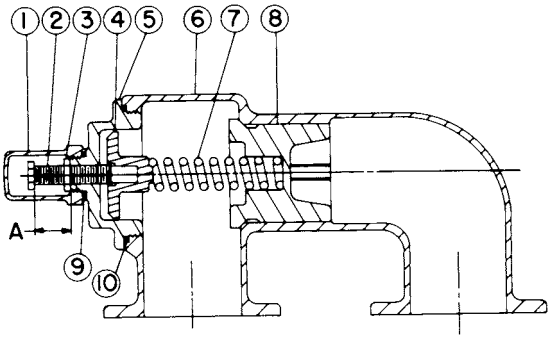

FIGURE 12

VALVE - LIST OF PARTS			
1.	Valve Cap	6.	Valve Body
2.	Adjusting Screw	7.	Valve Spring
3.	Lock Nut	8.	Poppet
4.	Spring Guide	9.	Cap Gasket
5.	Bonnet	10.	Bonnet Gasket

DISASSEMBLY

Mark valve and head before disassembly to insure proper reassembly.

1. Remove valve cap.
2. Measure and record length of extension of adjusting screw. **Refer to "A" on Figure 12.**
3. Loosen locknut and back out adjusting screw until spring pressure is released.
4. Remove bonnet, spring guide, spring and poppet from valve body. Clean and inspect all parts for wear or damage and replace if necessary.

ASSEMBLY

Reverse procedures outlined under Disassembly. If valve is removed for repairs be sure to replace in same position. Relief valve adjusting screw cap must always point towards suction side of pump. If pump rotation is reversed, remove relief valve and turn end for end.

PRESSURE ADJUSTMENT

If a new spring is installed or if pressure setting of pressure relief valve is to be changed from that which the factory has set, the following instructions must be carefully followed.

1. Carefully remove valve cap, which covers adjusting screw.
2. Loosen locknut (which locks adjusting screw so pressure setting will not change during operation of pump).
3. Install a pressure gauge in discharge line for actual adjusting operation.
4. Turn adjusting screw in to increase pressure and out to decrease pressure.
5. With discharge line closed at point beyond pressure gauge and pump running, gauge will show maximum pressure that the valve will allow (full bypass).

IMPORTANT

In ordering parts for pressure relief valve, always give model number and serial number of pump as it appears on nameplate and name of part wanted. When ordering springs, be sure to give pressure setting desired.

HEAT CARTRIDGES

INSTALLATION INSTRUCTIONS:

WARNING !

The pump needs to be properly grounded before the heat cartridges are installed.

1. Spacers should be installed between the foot of the pump and the base. This will create an air gap between the pump and base to limit heat transfer to the base.
2. Coat the threads of the heat cartridge with an anti-seize compound prior to installation. Install heat cartridges into the tapped ports on the head and bracket in the locations shown in **Figure 13** below. **Figure 13** also shows the location for the thermocouple. The number of heaters used and the total wattage for each pump size is given in Table 1 below. ¾" heat cartridges should be tightened to 20 ft-lbs.
3. Viking recommends installing a closed loop temperature controller with a control algorithm that will minimize or prevent overshooting the set point temperature. The set point temperature needs to be slightly higher than the melting point and significantly lower than the flash point or boiling point of the liquid being pumped. Viking does offer a controller for use with our heat cartridges. Ask your local Viking distributor for details.

WARNING !

Setting the set point temperature higher than necessary will not make the pump heat any faster and will shorten the life of the heat cartridges.

4. Properly insulate the pump to minimize heat loss. The pump will not heat properly if it is not insulated.

DANGER !

- **Always disconnect, lockout, and tag out supply circuits prior to installing.**
- **The installation must comply with standard and local regulations.**
- **All wiring should be done by a licensed electrician to meet local codes.**
- **Study this manual thoroughly before installing and using the heat cartridges.**
- **Pay special attention to this section and the parts marked "WARNING!" or "DANGER".**
- **Should questions or uncertainties arise, please contact your authorized Viking distributor.**

Failure to follow these instructions may cause an electrical shock and/or sparks, which may result in serious injury or death.

NOTE:

1. Heat cartridges, temperature probes, and controllers must be wired by a licensed electrician to meet local codes.
2. Heat cartridges require 240VAC, 1 Phase, 60 Hz or 220VAC, 1 Phase, 50 Hz power supply.
3. Heat cartridges are UL, CSA, & CE marked, RoHs compliant.
4. Heat cartridges and cables are water resistant but not water proof. They need to be installed in a protected area.
5. To make sure that the liquid within the pump is melted and to avoid damage to the pump, do not start the pump until the set point temperature has been reached.
6. Several factors such as the size of pump, the set point temperature, and the insulation will affect the amount of time it will take for the pump to reach the set point temperature. Typically it will take 3-4 hours for the pump to reach its set point temperature.
7. Do not use heat cartridges with different watt densities from those supplied by Viking. Changing watt densities may result in localized over or under heating.
8. The thermocouple or temperature probe must be installed in the bracket location shown in **Figure 13** below. Any other location may result in localized over or under heating.
9. Please see TSM 630.4 for technical information on the Viking supplied controller for the heat cartridges.
10. The wires for the heat cartridges can be joined together in a junction box, and a single wire from the junction box can be connected to the controller.
11. **WARNING** Heat cartridges will be hot. Do not touch pump or heat cartridges until they have been allowed to cool.

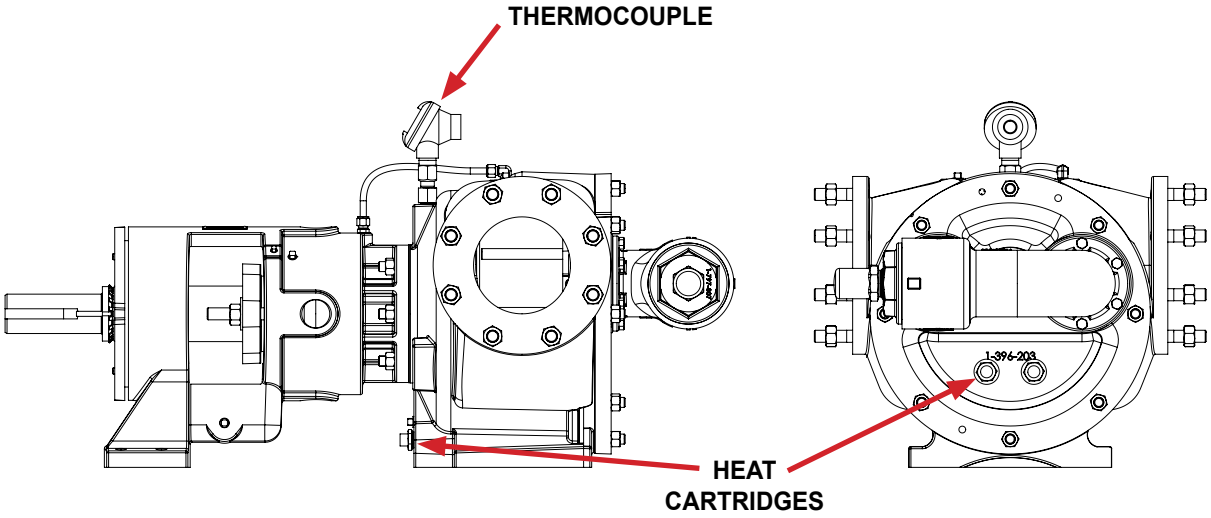

FIGURE 13 - HEAT CARTRIDGE AND THERMOCOUPLE LOCATIONS

Wattage By Pump Size			
Pump Size	Numbers of Heaters in Head	Number of Heaters in Bracket	Total Wattage
N	2	2	2500

TABLE 1 - NUMBER OF HEAT CARTRIDGES IN EACH PUMP MODEL

VIKING PUMP

IDEX CORPORATION

WARRANTY

Viking warrants all products manufactured by it to be free from defects in workmanship or material for a period of one (1) year from date of startup, provided that in no event shall this warranty extend more than eighteen (18) months from the date of shipment from Viking. The warranty period for Universal Seal series pumps ONLY, shipped after July 1, 2001 (Universal Seal models listed below) is three (3) years from date of startup, provided that in no event shall this warranty extend more than forty-two (42) months from the date of shipment from Viking.

If, during said warranty period, any products sold by Viking prove to be defective in workmanship or material under normal use and service, and if such products are returned to Viking's factory at Cedar Falls, Iowa, transportation charges prepaid, and if the products are found by Viking to be defective in workmanship or material, they will be replaced or repaired free of charge, FOB. Cedar Falls, Iowa.

Viking assumes no liability for consequential damages of any kind and the purchaser by acceptance of delivery assumes all liability for the consequences of the use or misuse of Viking products by the purchaser, his employees or others. Viking will assume no field expense for service or parts unless authorized by it in advance.

Equipment and accessories purchased by Viking from outside sources which are incorporated into any Viking product are warranted only to the extent of and by the original manufacturer's warranty or guarantee, if any.

THIS IS VIKING'S SOLE WARRANTY AND IS IN LIEU OF ALL OTHER WARRANTIES, EXPRESSED OR IMPLIED, WHICH ARE HEREBY EXCLUDED, INCLUDING IN PARTICULAR ALL WARRANTIES OF MERCHANTABILITY OR FITNESS FOR A PARTICULAR PURPOSE. No officer or employee of IDEX Corporation or Viking Pump, Inc. is authorized to alter this warranty.

Universal Seal Pump Models: Sizes H, HL, K, KK, L, LQ, LL, LS, Q, QS, N, R and RS in Series 124A, 4124A, 124E, 4124E, 124EH, 4124EH, 4124AE, 4124B, 224A, 4224A, 224AH, 4224AH, 224AE, 4224AE, 4224B, 324A, 4324A, 126A, 4126A, 226A, 4226A, 123A, 4123A, 223A, 4223A, 323A, 4323A, 127A, 4127A, 227A, 4227A, 327A and 4327A.

© 6/2011 Viking Pump Inc.
All rights reserved