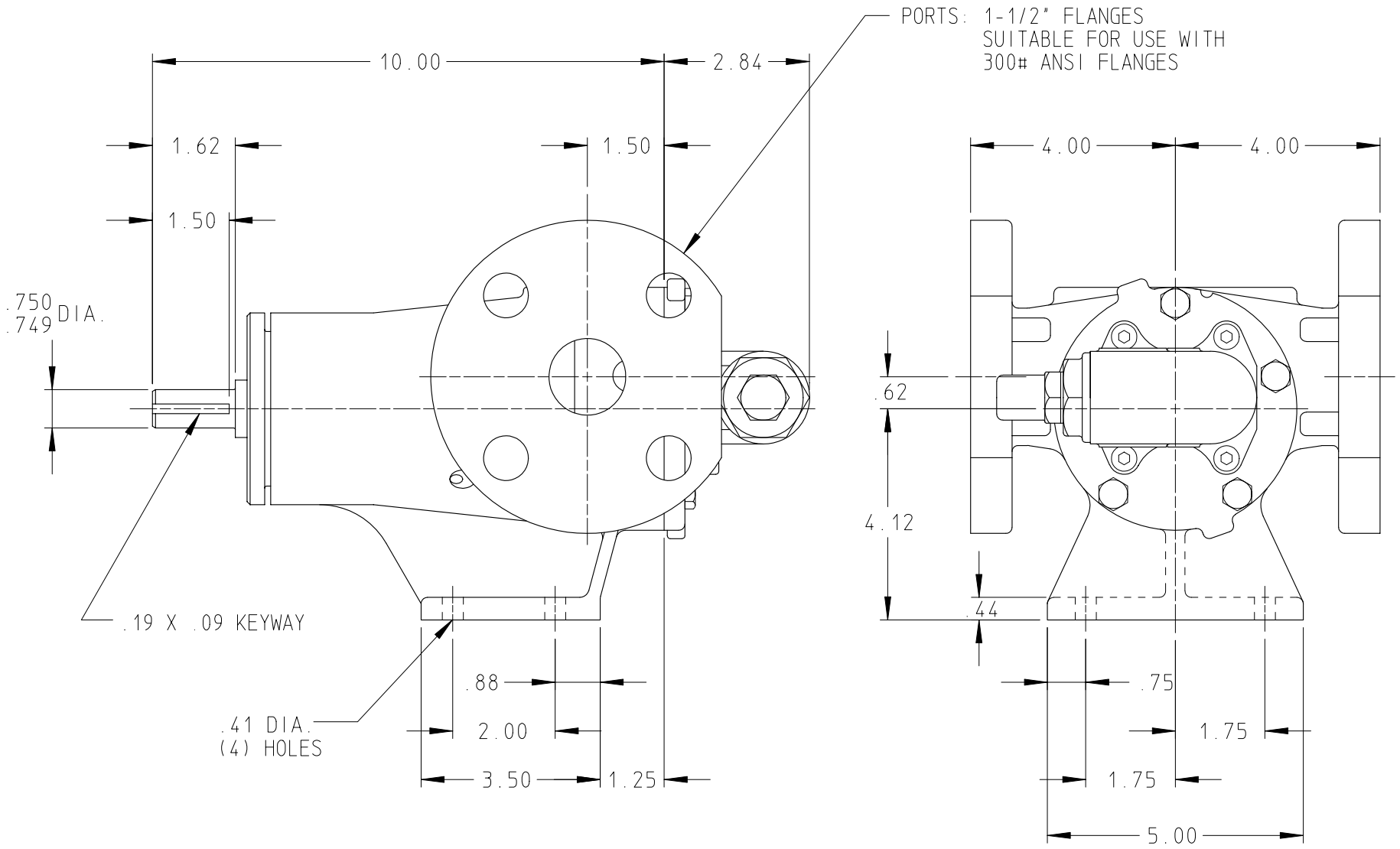

DRAWING NO. HV-3495

STANDARD MODELS: HJ4193, HL4193

DRAWN WUNDERLICH DATE 6 AUG 2003 CHECKED DRS DATE 8 AUG 2003	THIS DRAWING IS THE PROPERTY OF VIKING PUMP INC. AND IS PROPRIETARY IN GENERAL AND DETAIL. IT SHALL NOT BE COPIED OR ITS CONTENTS REVEALED TO OUTSIDE PARTIES WITHOUT THE WRITTEN CONSENT OF VIKING PUMP INC.	VIKING PUMP VIKING PUMP, INC. A Unit of IDEX Corporation Cedar Falls, Iowa 50613 U.S.A.	DRAWING NO. HV-3495	REV. B 2 OCT 2003