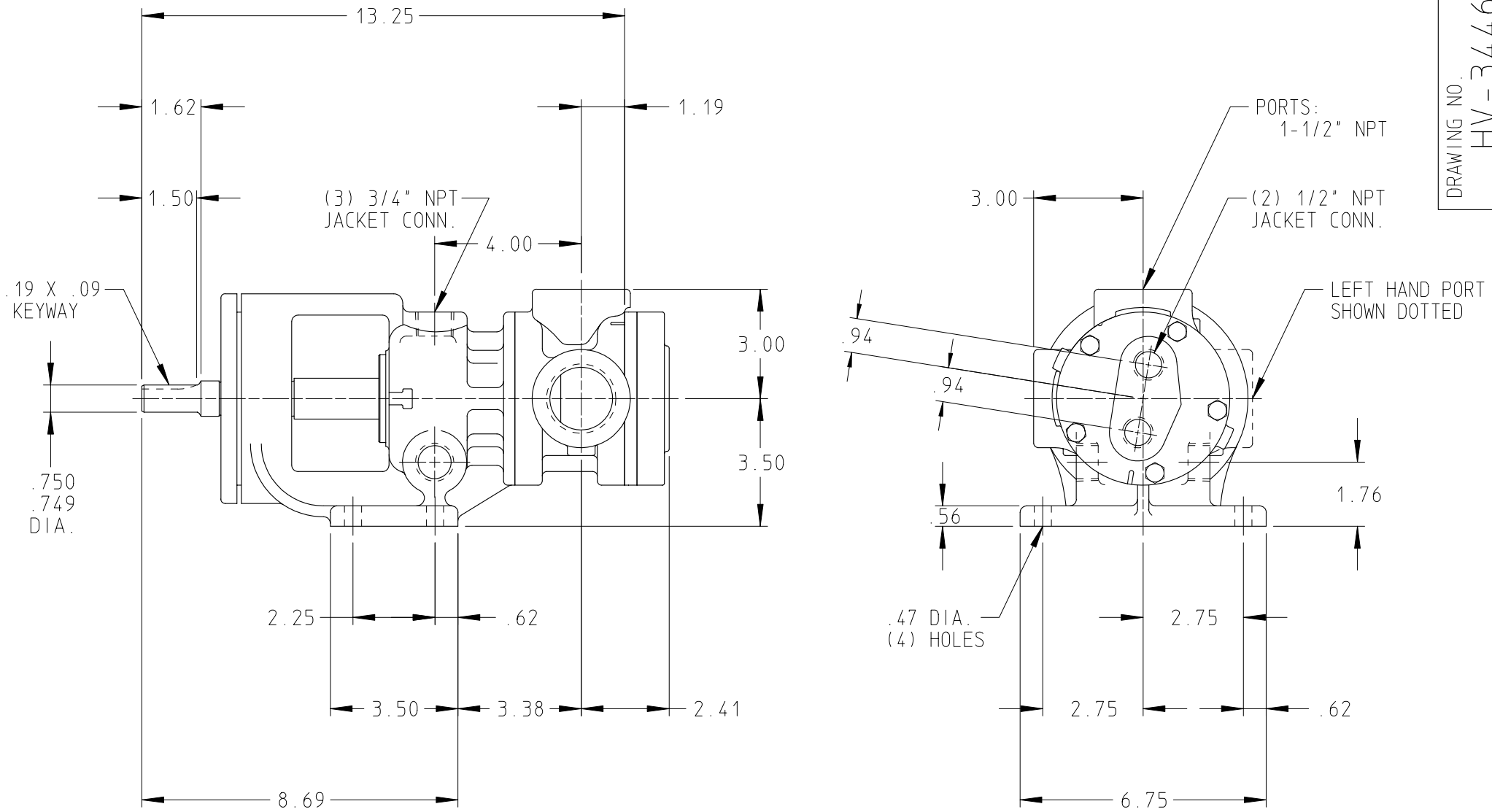

DRAWING NO. HV-3446

STANDARD MODELS: H224A, H4224A, H4224B, HL224A, HL4224A, HL4224B, H226A, H4226A, HL226A, HL4226A

DRAWN DANN DATE 17 APR 2002 CHECKED DC DATE 17 APR 2002	THIS DRAWING IS THE PROPERTY OF VIKING PUMP INC. AND IS PROPRIETARY IN GENERAL AND DETAIL. IT SHALL NOT BE COPIED OR ITS CONTENTS REVEALED TO OUTSIDE PARTIES WITHOUT THE WRITTEN CONSENT OF VIKING PUMP INC.	VIKING PUMP VIKING PUMP, INC. A Unit of IDEX Corporation Cedar Falls, Iowa 50613 U.S.A.	DRAWING NO. HV-3446	REV. B 26 SEP 2003